C7626 2.4/Female to N/Male Adapter 18 GHZ

Rev 000

Electrical	
Frequency	0-18 GHZ
VSWR	1.15 Max
Impedance	50 Ohms
Mechanical	
N & 2.4 Interface per	MIL-STD-348B
Operating Temperature	-40°C to +120°C
Materials	
Body	Passivated Stainless Steel
Contacts	BeCu
Contact Plating	SucoPRO
Dielectric(N)	PTFE
ROHS Compliant	

Outline

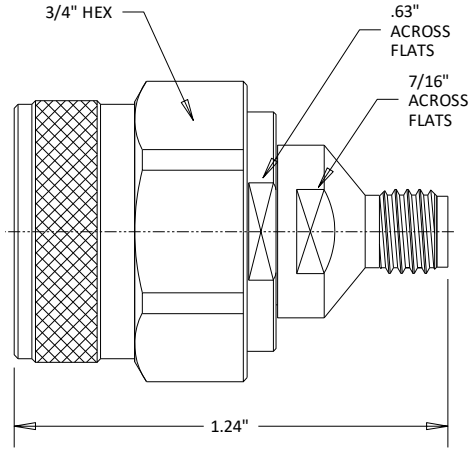

Dimensional Tolerances

.X	±.030
.XX	±.010
.XXX	±.005

Typical Data

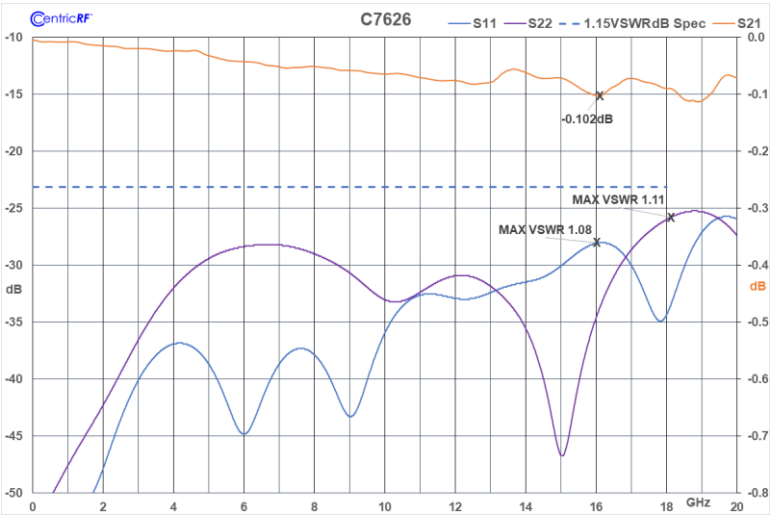

1130 Junction Dr. Suite 100. Allen, TX 75013 800-399-6891 www.CentricRF.com